11455 ACURA TSX

9/9/2009

GROSS LOAD CAPACITY WHEN USED AS A WEIGHT CARRYING HITCH: 2,000 LBS. TRAILER WEIGHT & 200 LBS. TONGUE WEIGHT.

DO NOT EXCEED VEHICLE MANUFACTURER'S RECOMMENDED TOWING CAPACITY.

WARNING: ALL NON-TRAILER LOADS APPLIED TO THIS PRODUCT MUST BE SUPPORTED BY AUXILIARY STABILIZING STRAPS.

** FAILURE TO PROPERLY SUPPORT NON-TRAILER LOADS WILL VOID PRODUCT WARRANTY**

HAVING INSTALLATION QUESTIONS? CALL TECHNICAL SUPPORT AT 1-800-798-0813

Parts List

ITEM	QTY	PART NUMBER	DESCRIPTION
1	1	CM-438-FW	7/16 " FISHWIRE TOOL
2	4	7/16-14 x 1 1/2	CARRIAGE BOLT
3	4	CM-SP7	.250 x 1.00 x 2.00" SQUARE HOLE SPACER
4	4	7/16-14	HEX FLANGE NUT
5	8	M6 - 1.00 X 25 HEX BOLT	HEX BOLT

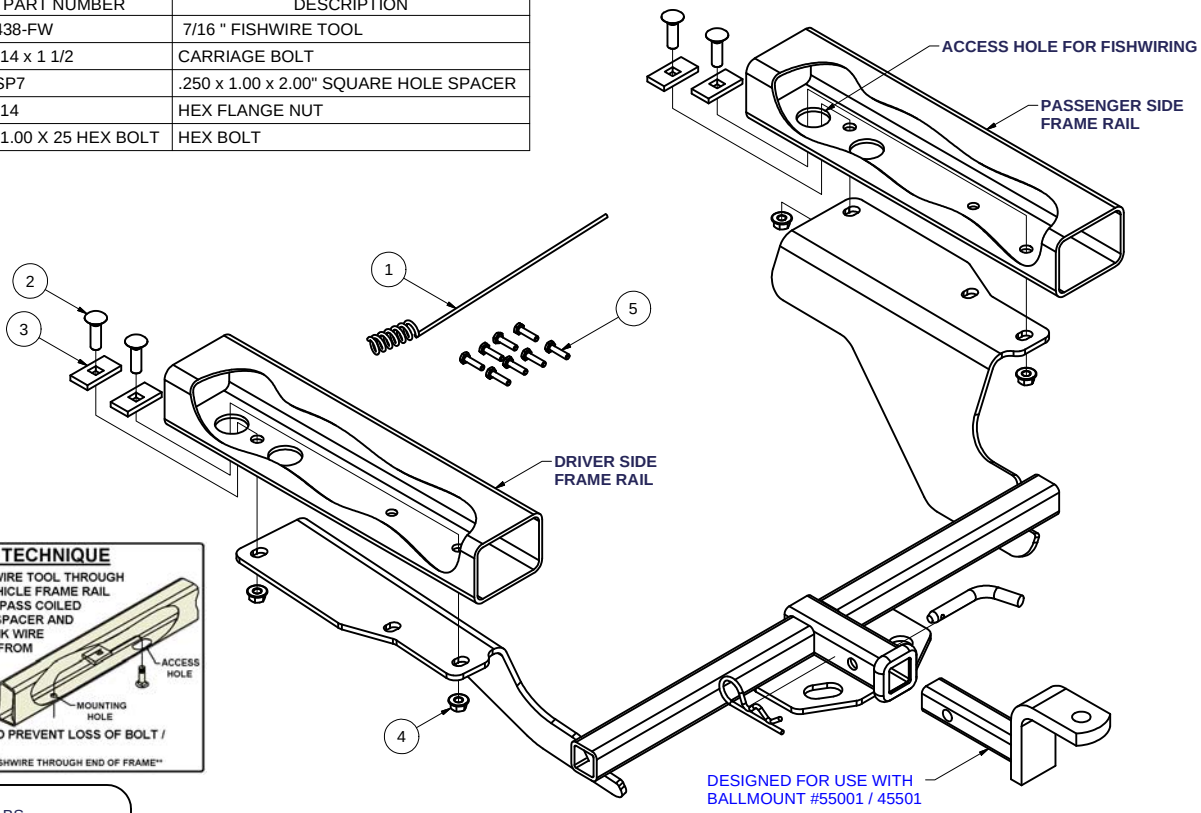

FISHWIRE TECHNIQUE

INSERT COILED END OF FISHWIRE TOOL THROUGH HITCH MOUNTING HOLE IN VEHICLE FRAME RAIL AND OUT THE ACCESS HOLE. PASS COILED END OF FISHWIRE THROUGH SPACER AND THREAD BOLT INTO COIL. KINK WIRE TO KEEP SPACER SEPERATE FROM BOLT AS SHOWN. PULL FISHWIRE, SPACER, AND BOLT THROUGH FRAME AND OUT MOUNTING HOLE. USE FISHWIRE TO GUIDE HITCH DURING MOUNTING AND PREVENT LOSS OF BOLT / SPACER INSIDE FRAME RAIL.

NOTE: SOME VEHICLES MAY FISHWIRE THROUGH END OF FRAME

HITCH WEIGHT: 31 LBS.

INSTALL TIME

PROFESSIONAL: 45 MINUTES

NOVICE (DIY): 90 MINUTES

INSTALL NOTES:

- DRILLING REQUIRED
- FISHWIRING REQUIRED
- REMOVE HEAT SHIELDS
- LOWER EXHAUST

INSTALLATION STEPS

1. Lower vehicle exhaust by removing the inboard and outboard exhaust hangers.
2. Remove the exhaust heat shields from both sides of the vehicle.
3. Enlarge the access holes in the vehicle. Fishwire carriage bolts and spacers into the existing frame rails.
4. Raise hitch into postion and install the 7/16" hex flange nuts.
5. Torque all 7/16" fasteners to 50 lb-ft and all M6 fasteners to 7 lb-ft.
6. Reinstall the exhaust heat shields between the hitch and the exhaust using the M6 fasteners provided (if installed correctly the 7/16" carriage bolts will fit through existing holes in the vehicle heat shields).
7. Reinstall the vehicle exhaust.

PERIODICALLY CHECK THIS RECEIVER HITCH TO ENSURE THAT ALL FASTENERS ARE TIGHT AND THAT ALL STRUCTURAL COMPONENTS ARE SOUND.

Curt Manufacturing Inc., warrants this product to be free of defects in material and/or workmanship at the time of retail purchase by the original purchaser. If the product is found to be defective, Curt Manufacturing Inc., may repair or replace the product, at their option, when the product is returned, prepaid, with proof of purchase. Alteration to, misuse of, or improper installation of this product voids the warranty. Curt Manufacturing Inc.'s liability is limited to repair or replacement of products found to be defective, and specifically excludes liability for incidental or consequential loss or damage.