11487 04-07 SCION xB

11/9/2011

GROSS LOAD CAPACITY WHEN USED AS A WEIGHT CARRYING HITCH: 2,000 LBS. TRAILER WEIGHT & 200 LBS. TONGUE WEIGHT.

*****DO NOT EXCEED VEHICLE MANUFACTURER'S RECOMMENDED TOWING CAPACITY.*****

WARNING: ALL NON-TRAILER LOADS APPLIED TO THIS PRODUCT MUST BE SUPPORTED BY AUXILIARY STABILIZING STRAPS.

**** FAILURE TO PROPERLY SUPPORT NON-TRAILER LOADS WILL VOID PRODUCT WARRANTY****

HAVING INSTALLATION QUESTIONS? CALL TECHNICAL SUPPORT AT 1-800-798-0813

Parts List

ITEM	QTY	PART NUMBER	DESCRIPTION
1	4	M10-1.25 x 35	HEX BOLT
2	4	7/16"	CONICAL TOOTHED WASHER
3	1	1_4-20 x 1.00 HEX BOLT	1/4-20 x 1.00 HEX BOLT
4	1	1/4"	WASHER
5	1	1_4 - 20	NYLOCK HEX NUT

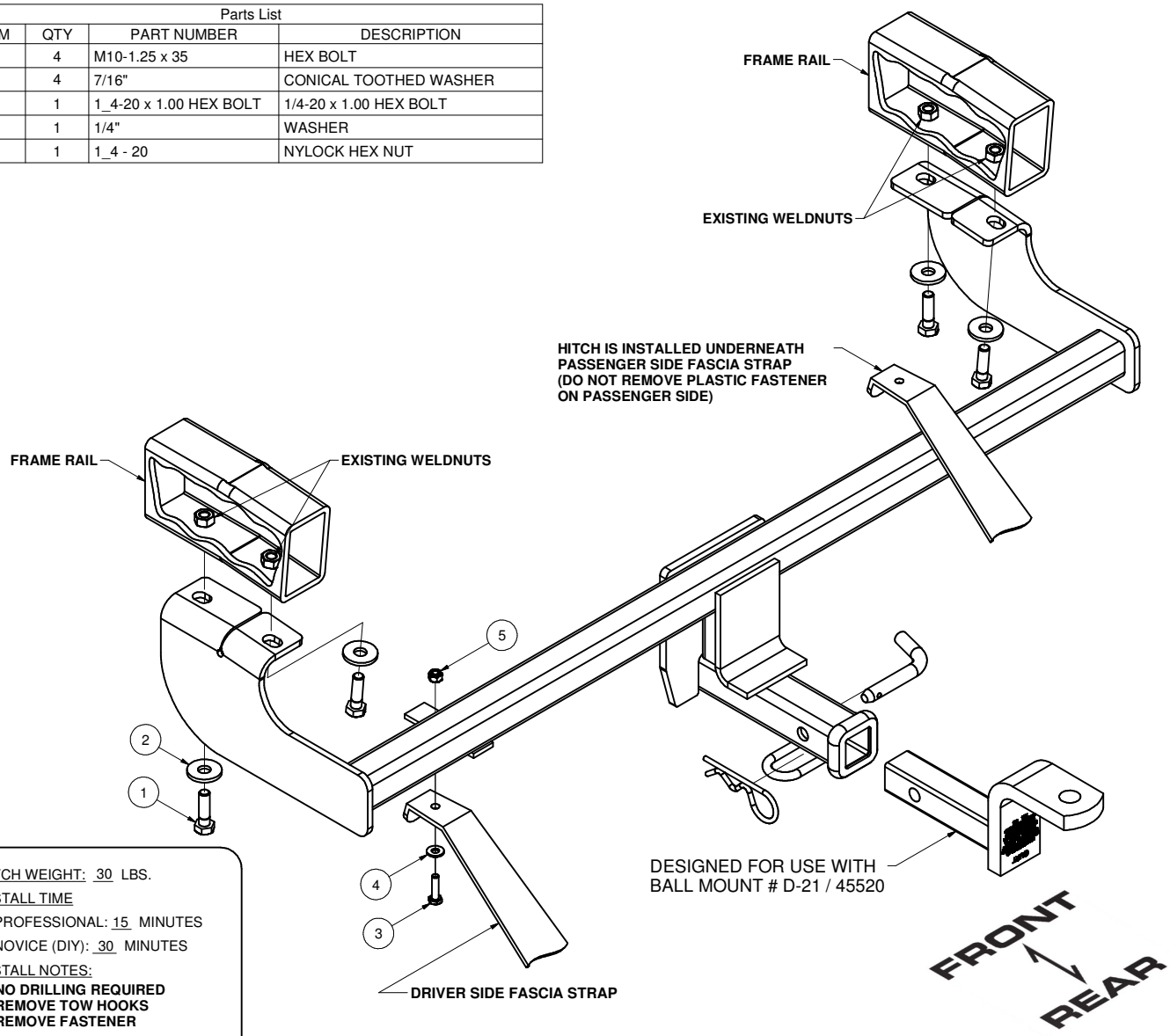

HITCH WEIGHT: 30 LBS.

INSTALL TIME

PROFESSIONAL: 15 MINUTES

NOVICE (DIY): 30 MINUTES

INSTALL NOTES:

-NO DRILLING REQUIRED
-REMOVE TOW HOOKS
-REMOVE FASTENER

INSTALLATION STEPS

1. Lower exhaust for easement of installation.
2. Remove tow hooks from driver and passenger side frame rails if equipped. (Return to customer.)
3. Remove plastic push fastener from driver side fascia strap and discard.
4. Raise hitch into position and secure with hex bolts and conical washers through existing weldnuts as shown.
5. Reinstall fascia strap using hex bolt, washer, and nylon lock nut.
6. Torque all 10mm fasteners to 37 lb-ft and all 1/4" fasteners to 8 lb-ft.

PERIODICALLY CHECK THIS RECEIVER HITCH TO ENSURE THAT ALL FASTENERS ARE TIGHT AND THAT ALL STRUCTURAL COMPONENTS ARE SOUND.

Curt Manufacturing Inc., warrants this product to be free of defects in material and/or workmanship at the time of retail purchase by the original purchaser. If the product is found to be defective, Curt Manufacturing Inc., may repair or replace the product, at their option, when the product is returned, prepaid, with proof of purchase. Alteration to, misuse of, or improper installation of this product voids the warranty. Curt Manufacturing Inc.'s liability is limited to repair or replacement of products found to be defective, and specifically excludes liability for incidental or consequential loss or damage.