13252 CHEVY COLORADO, GMC CANYON & ISUZU I SERIES PICK-UPS

9/30/2009

GROSS LOAD CAPACITY WHEN USED AS A WEIGHT CARRYING HITCH: 4,000 LBS. TRAILER WEIGHT & 400 LBS. TONGUE WEIGHT.
GROSS LOAD CAPACITY WHEN USED AS A WEIGHT DISTRIBUTION HITCH: 6,000 LBS. TRAILER WEIGHT & 600 LBS. TONGUE WEIGHT

******DO NOT EXCEED VEHICLE MANUFACTURER'S RECOMMENDED TOWING CAPACITY.******

HAVING INSTALLATION QUESTIONS? CALL TECHNICAL SUPPORT AT 1-800-798-0813

Parts List			
ITEM	QTY	PART NUMBER	DESCRIPTION
1	4	1/2-13 x 1 3/4	CARRIAGE BOLT
2	4	HFN 1213	HEX FLANGE NUT
3	1	1/2"	FISHWIRE TOOL
4	2	CM-SP52	.500 x 1.25 x 2.50" ROUND HOLE SPACER
5	2	5/8"	WASHER WIDE
6	2	M14 - 2 x 60 HEX	HEX BOLT
7	2	CM-SP9	.250 x 1.25 x 2.50" SQUARE HOLE SPACER
8	4	CM-SP10	.250 x 1.00 x 2.50" SQUARE HOLE SPACER

FISHWIRE TECHNIQUE

INSERT COILED END OF FISHWIRE TOOL THROUGH HITCH MOUNTING HOLE IN VEHICLE FRAME RAIL AND OUT THE ACCESS HOLE. PASS COILED END OF FISHWIRE THROUGH SPACER AND THREAD BOLT INTO COIL. KINK WIRE TO KEEP SPACER SEPERATE FROM BOLT AS SHOWN. PULL FISHWIRE, SPACER, AND BOLT THROUGH FRAME AND OUT MOUNTING HOLE. USE FISHWIRE TO GUIDE HITCH DURING MOUNTING AND PREVENT LOSS OF BOLT / SPACER INSIDE FRAME RAIL.

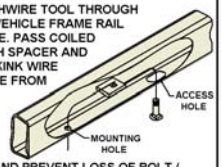

NOTE: SOME VEHICLES MAY FISHWIRE THROUGH END OF FRAME

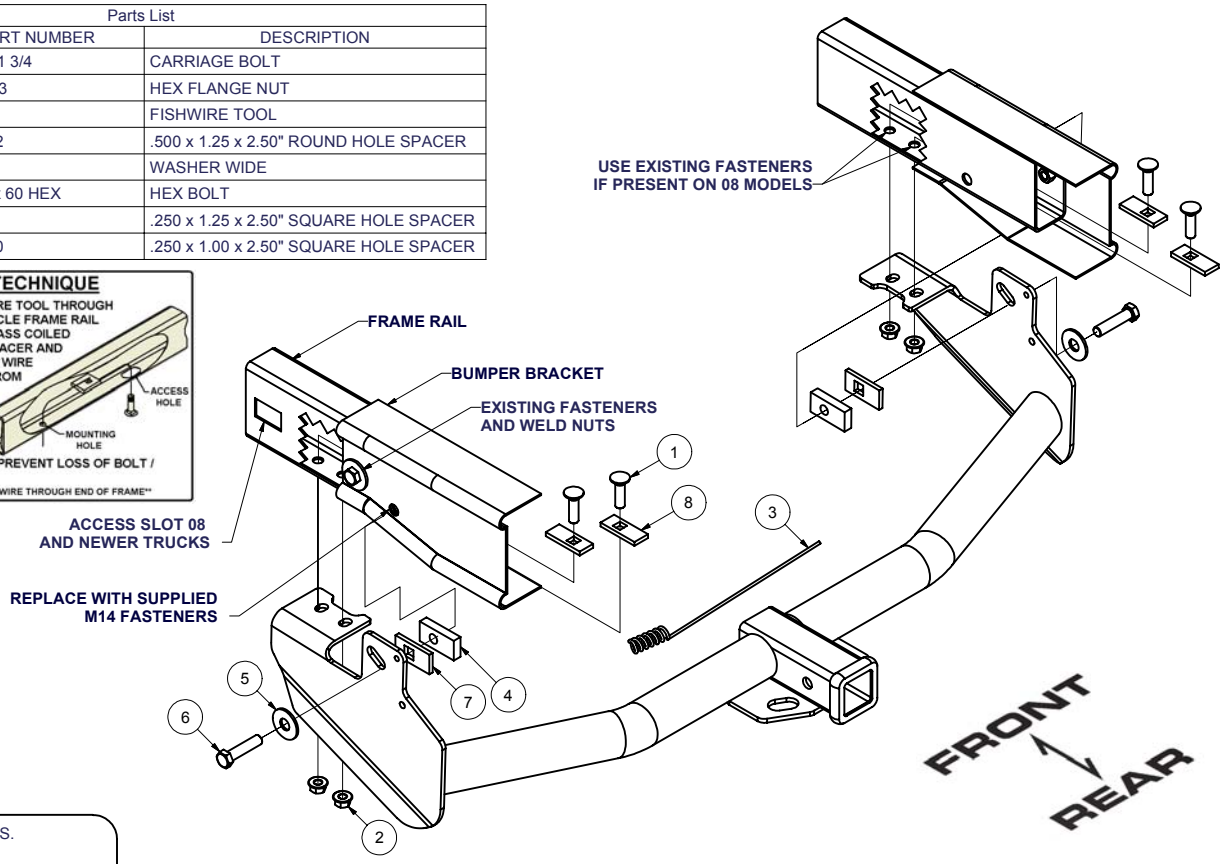

HITCH WEIGHT: 30 LBS.

INSTALL TIME

PROFESSIONAL: 30 MINUTES

NOVICE (DIY): 60 MINUTES

INSTALL NOTES:

- NO DRILLING REQUIRED.
- MAY NEED TO ENLARGE ACCESS HOLE

NOTE:
-HITCH IS PURPOSELY BUILT WIDE
-FRAME BRACKETS WILL DRAW IN WHEN TIGHTENED

INSTALLATION STEPS

1) On 2007 and earlier trucks the bumper brackets are on the outside of the truck frame. On 2008 and newer trucks the bumper brackets are inside the truck frame. Remove forward bumper bracket bolt, both sides; and loosen rear bumper bracket bolt.

2) Raise hitch into position. Attach with supplied M14 hex bolt and washer. Place a 1/2" and 1/4" thick spacer between hitch side plate and bumper bracket.(Both sides) Loosely fasten both sides before tightening.

3) Fishwire 1/2" carriage bolts and spacers inside frame rail as shown. On 2007 and older trucks you can fishwire from the end of the frame. On 2008 and newer trucks there is and access slot on the outside of the frame. Fasten with 1/2" flange nuts.

4) Torque M14 fasteners to 135 lb.-ft. & 1/2" fasteners to 75 lb.-ft.

PERIODICALLY CHECK THIS RECEIVER HITCH TO ENSURE THAT ALL FASTENERS ARE TIGHT AND THAT ALL STRUCTURAL COMPONENTS ARE SOUND.

Curt Manufacturing Inc., warrants this product to be free of defects in material and/or workmanship at the time of retail purchase by the original purchaser. If the product is found to be defective, Curt Manufacturing Inc., may repair or replace the product, at their option, when the product is returned, prepaid, with proof of purchase. Alteration to, misuse of, or improper installation of this product voids the warranty. Curt Manufacturing Inc.'s liability is limited to repair or replacement of products found to be defective, and specifically excludes liability for incidental or consequential loss or damage.