13333 2003 - PRESENT DODGE RAM 1500 (BUILT AFTER 11/02) / 2500HD / 3500HD

6/30/2009

GROSS LOAD CAPACITY WHEN USED AS A WEIGHT CARRYING HITCH: 6,000 LBS. TRAILER WEIGHT & 600 LBS. TONGUE WEIGHT.
GROSS LOAD CAPACITY WHEN USED AS A WEIGHT DISTRIBUTION HITCH: 10,000 LBS. TRAILER WEIGHT & 1,000 LBS. TONGUE WEIGHT

*****DO NOT EXCEED VEHICLE MANUFACTURER'S RECOMMENDED TOWING CAPACITY.*****

Parts List

ITEM	QTY	PART NUMBER	DESCRIPTION
1	2	1/2-13 x 1 1/2	CARRIAGE BOLT
2	2	CM-SP4	.250 x 1.50 x 3.00" SQ. HOLE SPACER
3	2	HFN 1213	HEX FLANGE NUT
4	2	1_2 x 30 FISHWIRE	1/2" x 30" FISHWIRE
5	1	3_4 - 10 x 3.25 FHSCS	FLAT HEAD SOCKET CAP SCREW, ZP

TOOLS REQUIRED
3/4" SOCKET
1/2" HEX BIT SOCKET
RATCHET
TORQUE WRENCH

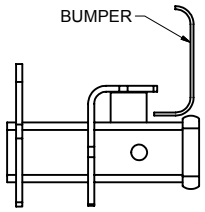

INSTALLED HITCH POSITION

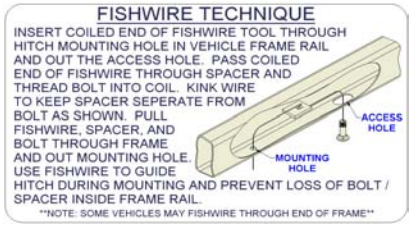

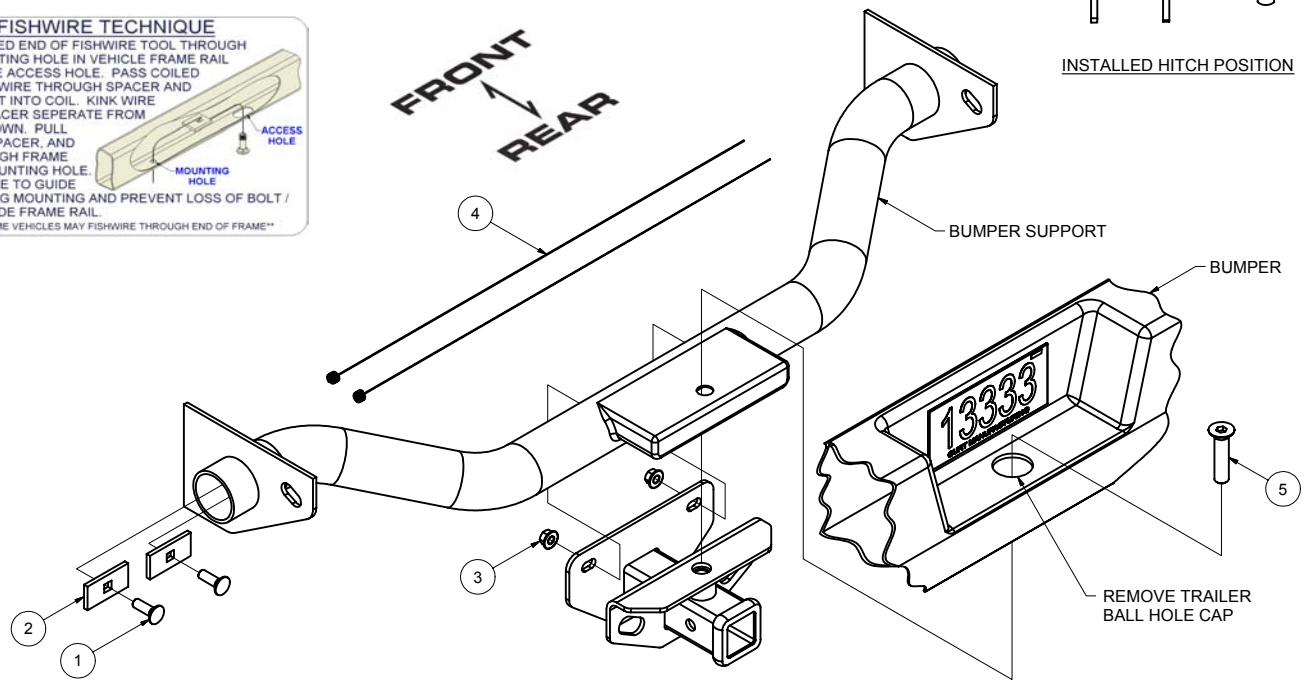

HITCH WEIGHT: 14 LBS.
INSTALL TIME: 30 MINUTES
INSTALL NOTES:
- NO DRILLING REQUIRED
- FISHWIRE HARDWARE

INSTALLATION STEPS

1. Remove existing trailer ball hole cap on center of bumper and return to vehicle owner.
2. Raise the hitch into position and secure with 3/4-10 x 3 1/4" flat head socket cap screw through the bumper and bumper support into the hitch.
3. Fishwire 1/2-13 carriage bolts and CM-SP4 spacers through the end of the bumper support tube and into each mount hole of the hitch. (See Fishwire Technique.)
4. Secure hitch to bumper support with 1/2-13 hex flange nuts.
5. Torque all 1/2" hardware to 75 lb-ft and all 3/4" hardware to 250 lb-ft.

PERIODICALLY CHECK THIS RECEIVER HITCH TO ENSURE THAT ALL FASTENERS ARE TIGHT AND THAT ALL STRUCTURAL COMPONENTS ARE SOUND.

Curt Manufacturing Inc., warrants this product to be free of defects in material and/or workmanship at the time of retail purchase by the original purchaser. If the product is found to be defective, Curt Manufacturing Inc., may repair or replace the product, at their option, when the product is returned, prepaid, with proof of purchase. Alteration to, misuse of, or improper installation of this product voids the warranty. Curt Manufacturing Inc.'s liability is limited to repair or replacement of products found to be defective, and specifically excludes liability for incidental or consequential loss or damage.